info@dmbraunco.com
www.dmbraunco.com
(714)-674-0855

MONACO LOVESEAT

MON-LS

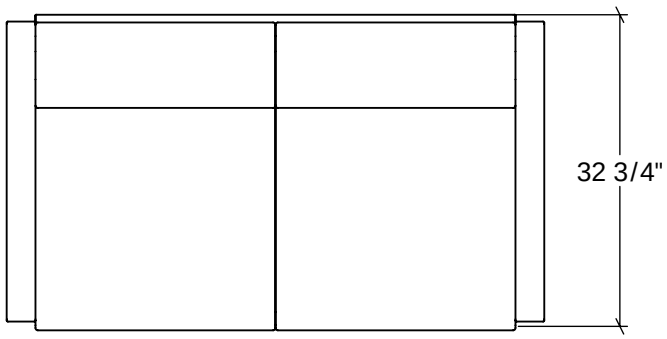



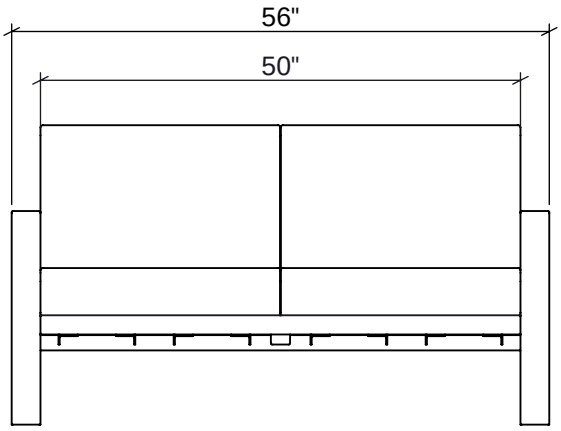

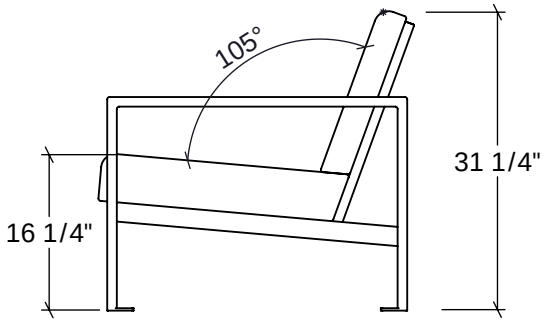

Materials, Finishes, and Details

- The Monaco Loveseat with cushions is available in 56"W x 32.75"D and 31.25"H. Seat height is 16.25"H.
- Fabricated from steel with a durable powder-coat finish.
- Includes dryfast outdoor cushions and Sunbrella Sling fabric.
- Stainless Steel Anchor tabs provided with 1/2" diameter holes for anchor bolts by others.
- Approximate weight is 142 lbs.

To Specify

- Specify MON-LS by DM Braun.
- Specify powder-coat color.
- For more detail regarding materials and color options visit www.dmbraunco.com/material-options.

Specifications are subject to change without notice. © 2026 DM Braun & Company